CP–6301

Sub. Code
11

B.Sc. DEGREE EXAMINATION, NOVEMBER 2015

Interior Design/Fashion Design

FRENCH – I

Time : 3 Hours Maximum : 60 Marks

Section A (5 × 2 = 10)

Répondez aux questions suivantes

1. Traduisez en Francais :
   (a) Good Morning Madam
   (b) Good afternoon Sir

   Ou

   (c) Thank you Sir
   (d) Good bye Madam

2. Traduisez en anglais :
   (a) double é
   (b) i grec

   Ou

   (c) Zéd
   (d) ache

3. Ecrivez les nombres :
   (a) quatre
   (b) douze

   Ou

   (c) vingt
   (d) Seize

4. Ecrivez le Singulier des noms :

(a) Le garçon

(b) Le travail

Ou

(c) Le Corail

(d) L'émail

5. Complétez avec l' article défini :–

(a) ———— élève

(b) ———— Femme

Ou

(c) ———— maison

(d) ———— arbres.

Section B (5 × 10 = 50)

Répondez aux questions suivantes :

6. (a) les signes De Ponctuation

(i) . (ii) ,

(iii) ; (iv) :

(v) ?

Ou

(b) (i) - (ii) " "

(iii) . . . (iv) !

(v) —

7. (a) Écrivez les nombres en letters.

(i) 1 á 10 &

(ii) 21 á 30

Ou

(b) (i) 51 á 60 &

(ii) 71 á 80

8. (a) Ecrivez les noms de couleurs en Français

Ou

(b) Ecrivez le mois de l'annee.

9. (a) Fill in the blanks with le, La, L' and les :

(i) ———— Soeur

(ii) ———— pére

(iii) ———— oiseau

(iv) ———— mère

(v) ———— Frères

(vi) ———— horloge

(vii) ———— hommes

(viii) ———— oreille

(ix) ———— Femme

(x) ———— Filles

Ou

(b) Complete with du or des :

(i) Le cahier ———— Professeur est sur La table.

(ii) Les Livres ———— étudiants sont bleus, rouges ou blancs.

(iii) Les Pattes ———— chien sont courtes.

(iv) Les aiguilles ———— horloges sont blanches.

(v) Les cadrans ———— montres sont noirs.

10. Give the French Equivalent words of the Following Countries :

(a) (i) England

(ii) Germay

(iii) India

(iv) Japan

(v) Moscow

Ou

(b) (i) Scotland

(ii) Spain

(iii) Sweden

(iv) Turkey

(v) United States

CP–6302

Sub. Code
12

B.Sc. DEGREE EXAMINATION, NOVEMBER 2015.

Interior Design / Fashion Design

ENGLISH — I

Time : 3 Hours Maximum : 60 Marks

Part A (5 × 2 = 10)

Answer **all** questions.

1. (a) Give the masculine form of the following nouns :

(i) daughter (iii) niece

(ii) princess (iv) girl.

Or

(b) Find out the nouns that are used as adjectives :

(i) Arun saw a cute city girl.

(ii) Latha is wearing silver bangles.

2. (a) Fill in the blanks with Articles :

(i) I met ———— M.P. in Chennai.

(ii) ———— Himalays are ———— highest mountains in ———— World.

Or

(b) Fill in the blanks with the correct pronoun :

(i) We are not as poor as ————————.

(ii) She will do the assignment by ————————.

(iii) Varun and ———————— attended the meeting.

(iv) He likes children ———————— play actively.

3. (a) Put in the suitable forms of verbs :

(i) Arun ———————— last week (come).

(ii) Vipun ———————— next week to Delhi. (send).

(iii) They ———————— to meet their teachers. (want).

(iv) I ———————— for the exams (prepare).

Or

(b) Fill up the blanks with appropriate modals :

(i) If Harini studied hard, she ———————— succeed.

(ii) ———————— I borrow your book?

(iii) You ———————— go out.

(iv) Where ———————— she stay?

4. (a) Fill in the blanks with the gerunds given in the bracket :

(watching, swimming, dancing, playing)

(i) ———————— is a good exercise.

(ii) Vidhya is ———————— now.

(iii) Imaya loves ———————— T.V.

(iv) ———————— cricket is his pastime.

Or

(b) Pick out the participle in each of the following sentences. Tell whether it is a present or a past participle.

(i) Assisted by her husband, she climbed to the stage.

(ii) Kavya met a kid rating ice-creams.

5. (a) Fill in the blanks with suitable propositions :

(i) She came ———————— India.

(ii) The rat ran ———————— the basket.

(iii) Hemant is frightened ———————— dogs.

(iv) Go away ———————— here.

Or

(b) The appropriate conjunctions to fill up the blanks :

(i) Surya will practice ———————— he wishes to win.

(ii) I can wait ———————— you finish the work.

(iii) Idle ———————— sambar is his favourite food.

(iv) He is poor ———————— he is honets.

Part B (5 × 10 = 50)

Answer **all** questions.

6. (a) Describe the kinds of Nouns.

Or

(b) What are the parts of Speech?

7. (a) Explain the uses of Definite Articles.

Or

(b) Make sentences with the following pronouns :

I, we, he, she, it, they, you, his, their, yours.

8. (a) Write an essay on transitive and intransitive verbs.

Or

(b) Find out the error in the following and make necessary corrections :

(i) Bread and butter are his breakfast.

(ii) Suvitha met a M.L.A. at Chennai.

(iii) The lecturer, as well as the students are ready.

(iv) None of them were informed of the matter.

(v) Babu is a man of letter.

(vi) They bought all the furnitures.

(vii) A.R.Rehman is one of the best musician in the film world.

(viii) Latha speaks truth.

(ix) One of my teachers have left for U.K.

(x) Rs.200 are a meagre salary.

9. (a) Mention TEN errors commonly made by students in the use of participates and gerunds.

Or

(b) Explain Auxiliaries with examples.

10. (a) Fill in the blanks with suitable prepositions :

(i) All children have ———— adjust ———— their parents ———— childhood ———— old age.

(ii) She begins her day ———— a cup of tea prepared ———— her mother ———— the kitchen.

(iii) Ramya was born ———— London ———— her granny's house ———— Thursday ———— January 2015.

Or

(b) Rewrite as directed :

(i) What an excellent performance! (change into assertive sentence).

(ii) Divya made a wonderful show (change into exclamatory sentence).

(iii) Anju <u>spoke</u> very coherently, (change the underlined word into a noun)

(iv) Look before you leap. (change into interrogative sentence).

(v) Mani's act was courageous (change the underlined word into a verb).

(vi) Nandhu had hopes of becoming the leader. (change the underlined word into an adjective).

(vii) Her studies were satisfactory. (change the underlined word into an Adverb).

(viii) Is honesty the best policy? (change into assertive sentence.

(ix) His sincere attitude promoted him to victory. (Change the underlined word into Noun).

(x) Sandhya sang for two hours. (change the underlined word into Noun)

CP–6303

Sub. Code
13

B.Sc. DEGREE EXAMINATION, NOVEMBER 2015

Interior Design

HISTORY OF ART AND ARCHITECTURE

Time : 3 Hours Maximum : 60 Marks

Section A (5 × 2 = 10)

Answer **all** questions.

1. (a) Sketch an example of a shelter in a prehistoric age.

Or

(b) List two factors influencing architecture with reference to Egypt.

2. (a) List two characters of Greek architecture.

Or

(b) Explain – Doric order.

3. (a) List two Architecture character of the Chalukya period.

Or

(b) List two Architectural examples of the Guptas.

4. (a) Give two examples for rock cut temples of India.

Or

(b) Describe "Dravidian architecture".

5. (a) List two salient features of Indo Aryan style.

Or

(b) What style is the "lingaraja temple" built in? Justify.

Section B (5 × 10 = 50)

Answer **all** questions.

6. (a) Describe the architectural characters of Egyptian Building.

Or

(b) Describe the architectural development in the old as new stone age.

7. (a) Explain in detail – THE PARTHENON, ATHENS.

Or

(b) Describe the factors influencing the Greek architecture.

8. (a) Explain in detail – DURGA TEMPLE as an example of Hindu architecture.

Or

(b) Describe the Evolution of Hindu temples.

9. (a) Explain in detail — THE BRITHADEE SWARA TEMPLE.

Or

(b) Describe the Architectural characteristics of the Pallavas.

10. (a) Explain in detail — THE SUN TEMPLE IN KONARK.

Or

(b) Explain in detail the Indo aryan style of Architecture.

CP–6304

Sub. Code
14

B.Sc. DEGREE EXAMINATION, NOVEMBER 2015

Interior Design

BASIC PLANNING AND DESIGNING (PRACTICAL)

Time : 3 Hours Maximum : 60 Marks

Section A (5 × 2 = 10)

Answer **all** questions.

1. (a) What is a "French curve"?

Or

(b) What does "FPS" stand for?

2. (a) Explain – Gothic lettering.

Or

(b) Write short notes on use of "Pen and Ink" in engineering design.

3. (a) What is "Anthropometrics"?

Or

(b) Sketch a plan, illustrating the space planning in a bedroom.

4. (a) Sketch a wooden joint of your choice.

Or

(b) List the types of dimensions used in illustrations of design of furniture.

5. (a) What is a "Plywood"?

Or

(b) List any two paint related products.

Section B (5 × 10 = 50)

Answer **all** questions.

6. (a) Define scale, its types and applications.

Or

(b) Explain the different kinds of drawing tools with necessary sketches.

7. (a) Write A-Z in single stroke lettering in font size of 0.6 cm.

Or

(b) Explain with illustration the different types of lines and its application.

8. (a) Explain in detail "Antropometrics" and "Circulation space" in space planning.

Or

(b) Draw the plan and interior elevation of a small apartment kitchen of size 6'0" × 8'0".

9. (a) Draw a "Chair" and mark the appropriate dimensions.

Or

(b) Explain with illustration the hardwares used in the construction of wooden furniture.

10. (a) Explain in detail "Paints" and related products.

Or

(b) Illustrate with details any two flooring of your choice.

———————

CP–6305

Sub. Code
15

B.Sc. DEGREE EXAMINATION, NOVEMBER 2015.

Interior Design

ELEMENTS OF DESIGN - PRACTICAL

Time : 3 Hours Maximum : 60 Marks

Part A (5 × 3 = 15)

Answer **all** questions.

1. Draw a cylinder of height 1 mts and diameter 0.5 mts in an axonometric view.

2. Draw a chair in isometric view.

3. Draw a "Window Grill".

4. Draw the plan and elevation of a "Table".

5. Do a free hand sketch of a planter box with a plant.

Part B (3 × 15 = 45)

Answer **all** questions.

6. Draw plan and front elevation of the layout.

7. Draw an isometric view of the layout.

8. Render the view with shocks and shadows (assume details as necessary).

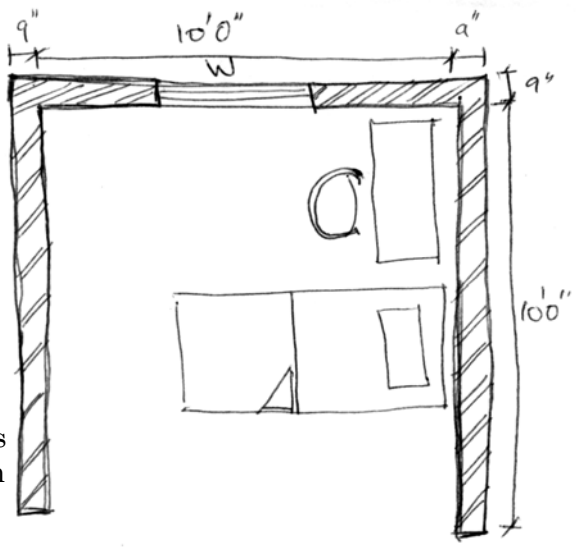

A Child's Bedroom

CP–6306

Sub. Code
31

B.Sc. DEGREE EXAMINATION, NOVEMBER 2015

Interior Design

MODERN INTERIORS

Time : 3 Hours Maximum : 60 Marks

Section A (5 × 2 = 10)

Answer **all** questions.

1. (a) Define the term – interior design.

Or

(b) List any two feature of modern interior design.

2. (a) Define "false ceiling".

Or

(b) Name any two materials used in false ceiling.

3. (a) Define the term "Ergonomic triangle" in kitchen design.

Or

(b) Sketch an ideal kitchen plan of your choice.

4. (a) Differentiate between natural and artificial lighting.

Or

(b) List any two popularly used variety of lamps in interiors.

5. (a) List two design criteria for office planning.

Or

(b) What are basic interior elements that composes an office space?

Section B (5 × 10 = 50)

Answer **all** questions.

6. (a) Discuss "Composition" with examples, in the context of modern "Interior design".

Or

(b) Explain with background the emergence of "Professional interior designers".

7. (a) Explain in detail the different categories of "fake ceiling".

Or

(b) Sketch with details a cross – section of a "false ceiling".

8. (a) Design a kitchen for a family of four. Illustrate in sketches the plan with dimension and a view.

Or

(b) Explain in detail the different types of kitchen plan.

9. (a) Explain in detail the different types of lighting arrangements.

Or

(b) Compare the advantages and disadvantages of artificial and natural lighting.

10. (a) Design an office space for an architect's firm that employs 5 people. Make necessary illustrations.

Or

(b) Discuss "Modern office planning" with a typical office as an example. Use illustrations as necessary.

———————

CP–6307

Sub. Code
32

B.Sc. DEGREE EXAMINATION, NOVEMBER 2015

Interior Design

MATERIAL SCIENCE – I

Time : 3 Hours Maximum : 60 Marks

Section A (5 × 2 = 10)

Answer **all** questions.

1. (a) What do you mean by refactory material?

Or

(b) What are the advantages of terra cotta tiles?

2. (a) List any two solvent used in paints.

Or

(b) What are the composition of paints?

3. (a) Draw the detail of washbasin fixing.

Or

(b) What are the different size of pipe used in bathroom fittings?

4. (a) What is the dimension of Hollow clay block?

Or

(b) What type of partition can be used in office space?

5. (a) What are the types of surface finishes?

Or

(b) What are the advantages of carpet flooring?

Section B (5 × 10 = 50)

Answer **all** questions.

6. (a) Explain the followings:

(i) Ceramic tiles

(ii) Terra cotta tiles

Or

(b) What are the criteria for selecting good tiles for interior?

7. (a) Explain about different tools used in painting.

Or

(b) Explain the following:

(i) Colour wheel

(ii) Contrast colour schemes

8. (a) Write about the different types of bathroom fittings.

Or

(b) Draw the construction detail of fixing bathtub.

9. (a) Explain the types of partition in interior space.

Or

(b) Sketch the construction detail of wooden partition and explain the components.

10. (a) Explain the detail about material selection for hospital floor.

Or

(b) Explain the following

(i) Carpet

(ii) Venetian blinds.

CP–6308

Sub. Code
33

B.Sc. DEGREE EXAMINATION, NOVEMBER 2015

Interior Design

CONSTRUCTION TECHNIQUES

Time : 3 Hours Maximum : 60 Marks

Part A (5 × 2 = 10)

Answer **all** questions.

1. (a) Mention any two functional requirements of a building.

Or

(b) Give the different types of foundations.

2. (a) Name some materials used in damp proofing.

Or

(b) Define water proofing.

3. (a) Write the different types of stair case.

Or

(b) Define a riser. Draw a neat diagram of a riser.

4. (a) Give any two comparison between stone masonry and brick masonry.

Or

(b) Mention some tools used in stone masonry.

5. (a) Mention any two types of arches.

Or

(b) Define a "key stone".

Part B (5 × 10 = 50)

Answer **all** questions.

6. (a) Give an account on the different types of foundation in detail.

Or

(b) Discuss the various components of a building with neat sketch.

7. (a) Enumerate the different methods of damp proofing with neat diagram.

Or

(b) Write the causes and effects of dampness in a building.

8. (a) Draw the plan and section of a typical dog-legged stair and label the parts.

Or

(b) Write the requirements of a good stair.

9. (a) Differentiate stone masonry and brick masonry.

Or

(b) Give an account on the classification of stone masonry.

10. (a) Draw an arch and label its parts.

Or

(b) Discuss in detail the classification of arches.

———————

CP–6309

Sub. Code
34

B.Sc. DEGREE EXAMINATION, NOVEMBER 2015

Interior Design

AUTOCAD I – PRACTICAL

Time : 3 Hours Maximum : 60 Marks

1. (a) Answer the following questions. (6 × 5 = 30)

   (i) Explain polygon and offset in CAD.

   (ii) Explain move, copy and rotate in CAD.

   (iii) Give examples for trim and extend commands.

   (iv) Explain fillet and chamfer in CAD.

   (v) Briefly explain dimensioning in CAD.

   (vi) Explain 3D commands used in Auto CAD.

   (b) Answer the following questions. (3 × 10 = 30)

   (i) Draw a plan of a living room of size 20 feet × 24 feet.

   (ii) Draw the furniture layout for above space.

   (iii) Draw 2 wall elevations for above space.

———————

CP–6310

Sub. Code
51

B.Sc. DEGREE EXAMINATION, NOVEMBER 2015

Interior Design

BUSINESS MANAGEMENT

Time : 3 Hours Maximum : 60 Marks

Section A (5 × 2 = 10)

Answer **all** questions.

1. (a) Define management.

Or

(b) What are the roles of management?

2. (a) Write any two importance of planning.

Or

(b) What do you mean by forecasting?

3. (a) What is organisation chart?

Or

(b) What do you mean by span of control?

4. (a) What is motivation?

Or

(b) What is top-down communication?

5. (a) What are the process of controlling?

Or

(b) Write the types of co-ordination.

Section B (5 × 10 = 50)

Answer **all** questions.

6. (a) Describe the functions of management and administration.

Or

(b) Explain the levels of management and its roles.

7. (a) Describe the strategies and policies of planning.

Or

(b) Discuss in detail about methods of planning.

8. (a) What is organization? Explain the principles of organisation.

Or

(b) Write a brief note on span of control.

9. (a) Explain in detail about supervision.

Or

(b) What is leadership? Explain the types of leadership.

10. (a) Explain the techniques of controlling.

Or

(b) Discuss in detail about co-ordination and its types.

CP–6311

Sub. Code
52

B.Sc. DEGREE EXAMINATION, NOVEMBER 2015

Interior Design

ESTIMATION AND COSTING

Time : 3 Hours Maximum : 60 Marks

Section A (5 × 2 = 10)

Answer **all** questions.

1. (a) What is estimate?

Or

(b) What are the different types of estimates?

2. (a) Why specifications are given importance?

Or

(b) Give typical specifications.

3. (a) What is contract? State the parties to it.

Or

(b) What is material contract?

4. (a) What are the various forms of value?

Or

(b) Why depreciation is given significance?

5. (a) What is labour rate analysis?

Or

(b) Why are quotations invited?

Section B

$(5 \times 10 = 50)$

Answer **all** questions.

6. (a) What is meant by estimation? Give a detailed estimate for a hypothetical structure.

Or

(b) Explain the features of different methods of costing for various structure.

7. (a) Enumerate the need and user of specifications.

Or

(b) Evaluate the various types of specifications.

8. (a) Explain the different types/forms of contract.

Or

(b) Describe the terms to be included in a contract.

9. (a) Explain the terms, 'depreciation' and 'obsolescence'. Also explain the methods of depreciation.

Or

(b) Discuss the importance of different forms of value.

10. (a) Explain the significance of material and labour rate analysis.

Or

(b) Describe the points to be considered before inviting quotations and after receipt of quotations.

CP–6312

Sub. Code
53

B.Sc. DEGREE EXAMINATION, NOVEMBER 2015

Interior Design

BUILDING SERVICES

Time : 3 Hours Maximum : 60 Marks

Part A (5 × 2 = 10)

Answer **all** questions.

1. (a) List any two causes of fire.

Or

(b) Define "fire load".

2. (a) Define "reverberation".

Or

(b) Explain the term "sound insulation".

3. (a) How are the following represented

(i) 5 amps socket

(ii) 15 amps socket.

Or

(b) What is a "fuse"?

4. (a) Define the term "Air conditioning".

Or

(b) Explain "Natural ventilation".

5. (a) List any two types of water closets.

Or

(b) What does the term "Trap" mean?

Part B (5 × 10 = 50)

Answer **all** questions.

6. (a) Discuss the fire resisting property of the following Brick, glass, concrete, steel, plaster.

Or

(b) Explain the different methods of fire protection.

7. (a) List and explain the characteristics of some popular sound absorbent materials.

Or

(b) Define acoustics and its influence in the design of a lecture hall.

8. (a) Name the electrical installions used in a Kitchen, their purpose and their symbols.

Or

(b) Create the electrical layout for the given Bath plan of a bedroom.

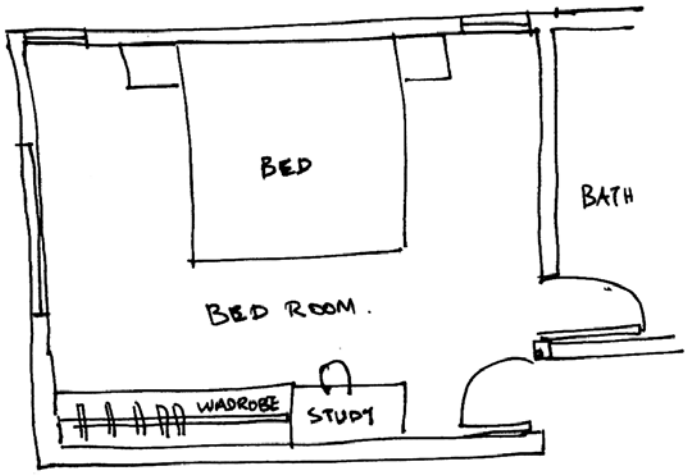

9. (a) Explain in detail the requirements of good ventilation.

Or

(b) Explain the different systems of air conditioning.

10. (a) What are the general guidelines to be a followed in the design of water supply and sanitary system.

Or

(b) Sketch the bathroom layout with the appropriate fixture in the give plan and also list the sanitary fixtures and water supply fixtures you have chosen.

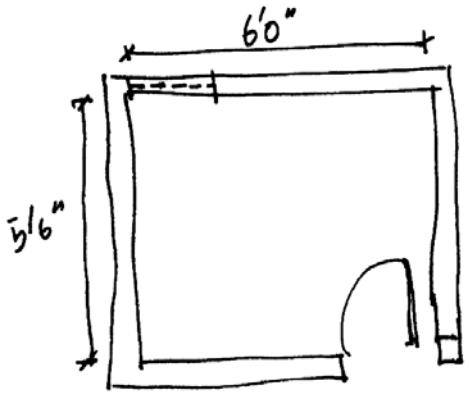

CP–6313	Sub. Code
	54

B.Sc. DEGREE EXAMINATION, NOVEMBER 2015

Interior Design

AUTOCAD III — PRACTICAL

Time : 3 Hours Maximum : 60 Marks

Answer **all** questions.

Part A (10 marks)

1. Draw an isometric view of a restaurant table.

Part B (50 marks)

2. Design a layout for a class room building and create the following details

   (a) Floor plan (10)

   (b) Furniture layout (10)

   (c) A section (15)

   (d) Building elevation. (15)

———————

CP–6314

Sub. Code
55

B.Sc. DEGREE EXAMINATION, NOVEMBER 2015

Interior Design

DESIGN STUDIO – III – PRACTICAL

Time : 3 Hours Maximum : 60 Marks

Part A (2 × 10 = 20)

Answer **all** questions.

1. Explain the concept of material research board for a small office.

2. Describe the role and uses of glass in building construction.

Part B (2 × 20 = 40)

Answer **all** questions.

3. Snack Bar :

A private Engineering College has proposed to construct a Snack bar to support the college canteen inside the campus. You are required to design the snack bar with the consideration of commercial activity and flow of people. The following are the requirements.

(a) Store room for keeping the prepared food of size 12 sqm.

(b) Store room for utensils and dishes to size 10 sqm.

(c) Cold storage room for soft drinks and icecreams of size 10 sqm.

(d) Service area (including cashier counter and hand wash area) of size of 100 sqm.

(e) Panty area of size of 12 sqm.

(f) Washing area for utensils of size 10 sqm.

4. Draw the following :

(a) Floor plan with furniture layout.

(b) Front elevation.

(c) Sectional elevation.

(d) Any one view of the building.